PLUMBING PIPING LEGEND

	REDUCING FITTING – PIPE REDUCES IN SIZE IN DIRECTION OF ARROW
	BALL VALVE WITH MANUAL LEVER ACTUATOR
	STOP VALVE
WHA	WATER HAMMER ARRESTOR
S	SANITARY DRAIN PIPING
V	SANITARY VENT PIPING
C	DOMESTIC COLD WATER PIPING
H	DOMESTIC HOT WATER PIPING
S	EXISTING SANITARY DRAIN PIPING
V	EXISTING SANITARY VENT PIPING
C	EXISTING DOMESTIC COLD WATER PIPING
H	EXISTING DOMESTIC HOT WATER PIPING
	PIPE TURNING DOWN
	PIPE TURNING UP
	FIXTURE CONNECTION
	POINT OF CONNECTION TO EXISTING
(D)	DEMOLISH
(E)	EXISTING TO REMAIN
(R)	RELOCATE
(N)	NEW

ABBREVIATIONS

ASHRAE – AMERICAN SOCIETY OF HEATING, REFRIGERATION, AND AIR CONDITIONING ENGINEERS, INC.
BTU/H – BRITISH THERMAL UNITS PER HOUR
CW – DOMESTIC COLD WATER
DEG. F – DEGREES FAHRENHEIT
DWV – DRAINAGE, WASTE, AND VENT
GAL – U.S. GALLON
G.C. – GENERAL CONTRACTOR
GPH – GALLONS PER HOUR
HW – DOMESTIC HOT WATER
LBS – POUNDS
P.C. – PLUMBING SUBCONTRACTOR
PSI – POUNDS PER SQUARE INCH
RC – DOMESTIC RECIRCULATION HOT WATER
SAN – SANITARY WASTE
TW – TEMPERED HOT WATER
W/ – WITH
WCO – WALL CLEANOUT
FCO – FLOOR CLEANOUT

PLUMBING KEYED NOTES

1. REMOVE EXISTING EXAM SINK AND RE-INSTALL IN NEW LOCATION.
2. DEMO WATER CLOSET AND LAVATORY.
3. 3/4" HW & CW DOWN IN WALL, PIPE 1/2" HW & CW TO SINK ON EACH SIDE OF WALL.

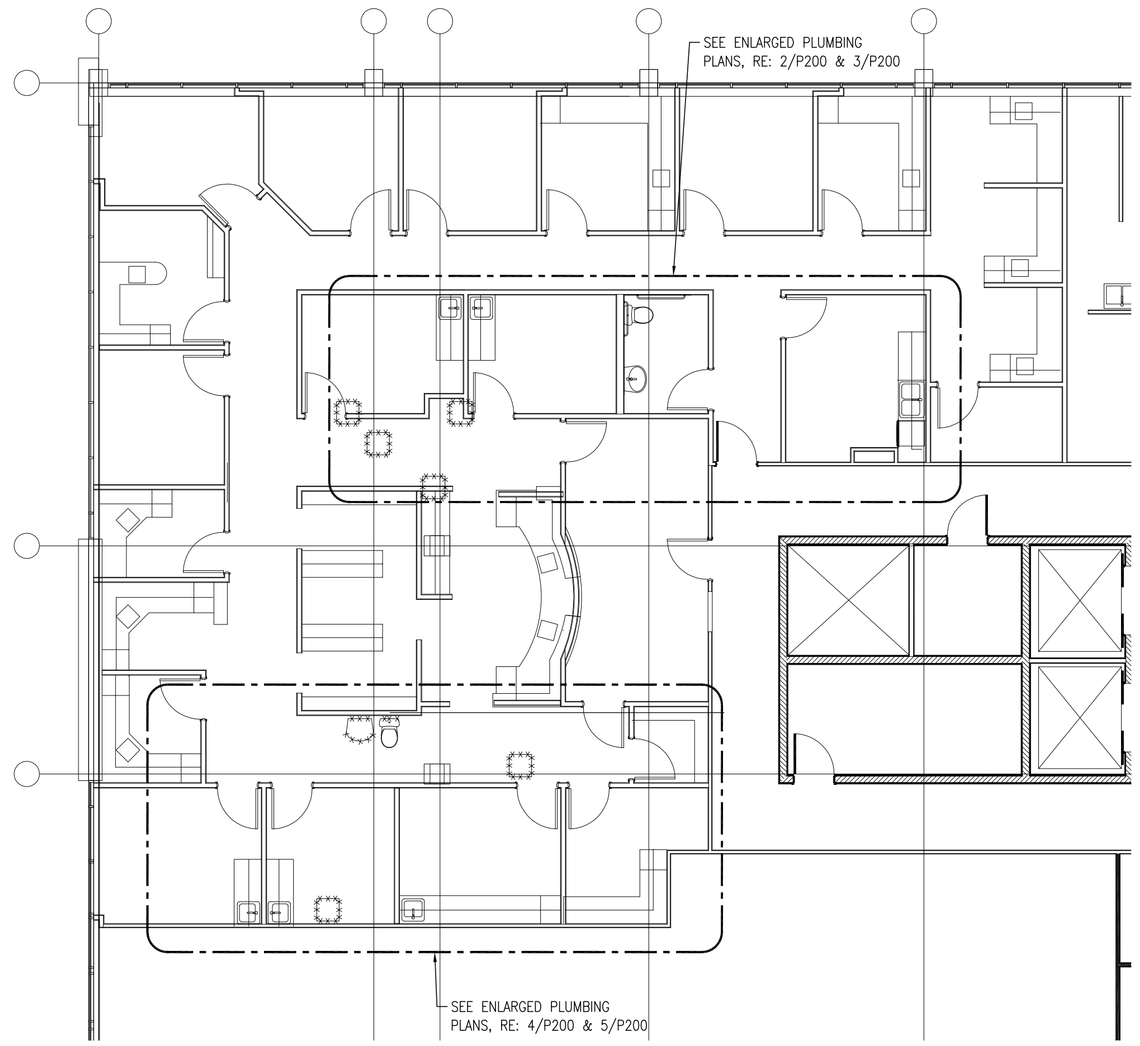

1 PLUMBING PLAN
1/4" = 1'-0"
NORTH

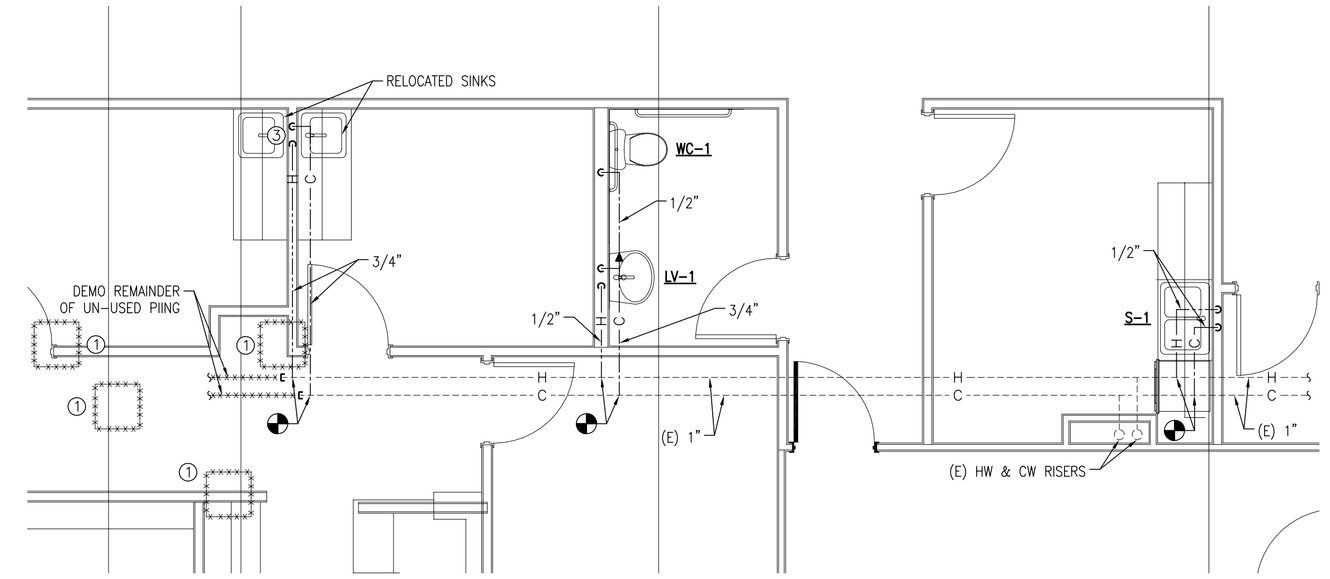

2 ENLARGED PLUMBING SUPPLY PLAN - NORTH
1/4" = 1'-0"
NORTH

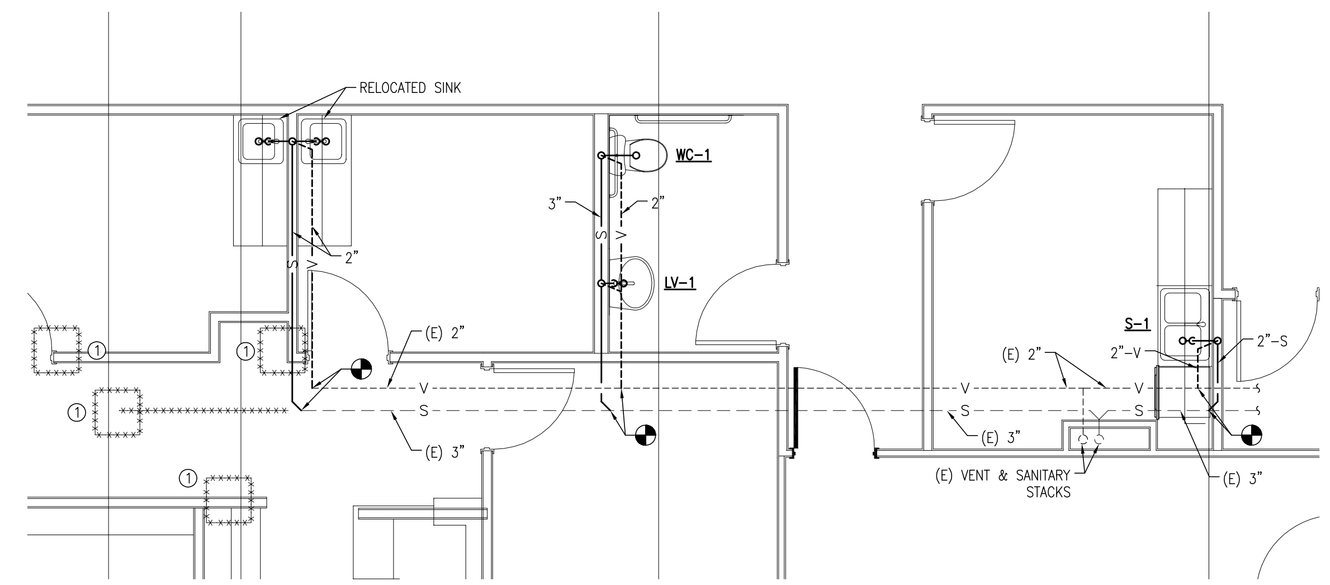

3 ENLARGED PLUMBING DWV PLAN - NORTH
1/4" = 1'-0"
NORTH

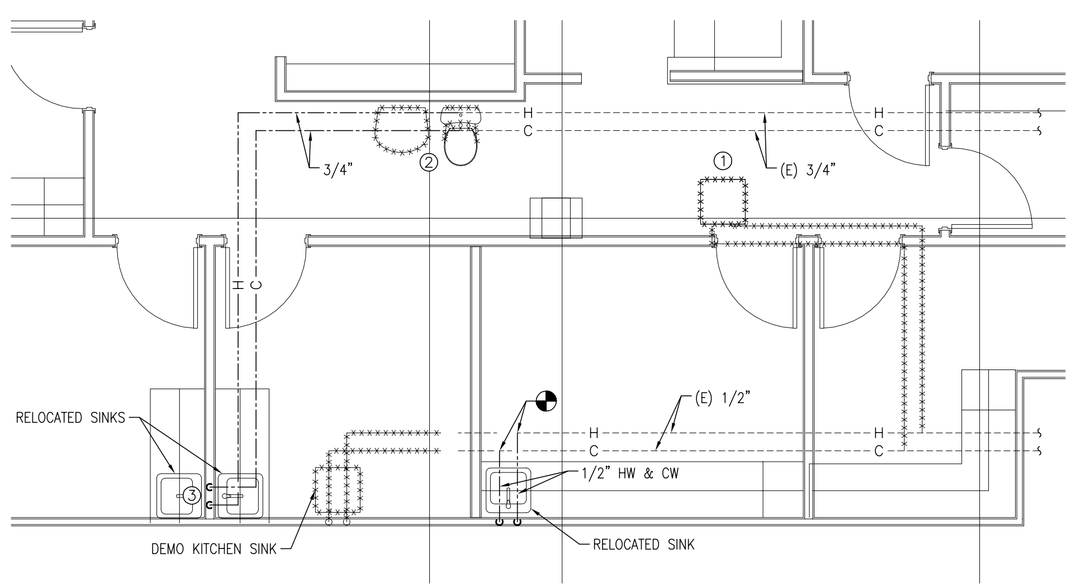

4 ENLARGED PLUMBING SUPPLY PLAN - SOUTH
1/4" = 1'-0"
NORTH

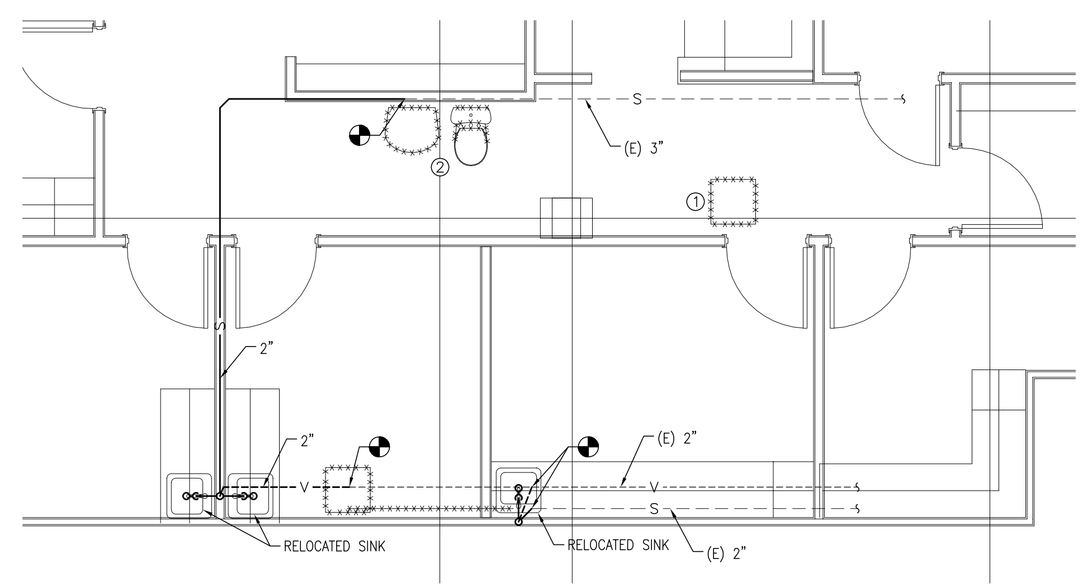

5 ENLARGED PLUMBING DWV PLAN - SOUTH
1/4" = 1'-0"
NORTH

All information, drawn or written on this document is the original unpublished work of the Architect. Duplication, disclosure, or use of this work without the consent of the Architect is prohibited.

CHRISTOPHER MENGES ENGINEERING, INC.
Mechanical Consulting Engineers
1100 W. Littleton Boulevard, Suite 400
Littleton, Colorado 80120
Ph (720) 283-3018 Fax (720) 283-6253
www.mengeseng.com

The R T O Group, Ltd.
Architects

3641 West 32nd Avenue ◆ Denver, Colorado 80211 ◆ Phone: 303-964-8282 ◆ Fax: 303-964-8383

COL. CARDIOVASCULAR SURGICAL ASSOCIATES
950 EAST HARVARD
SUITE 500
DENVER, COLORADO

Date	Issue
05/10/2010	PRICING

Project 100408

Drawing P200